Gerstenberg Schröder

11.300 ltr. Buffer Tank
Item 5001

Date/Drwn.	09-02-05 ÓS
App.	..
Scale	1:30
Rev./App.	14-03-04 ÓS
Project/Country	P2787 - DK

(*) 0/1.35-0½=556

Pos.no	Specification/Size	Drawing No./Size/Length	Angles (degrees clockwise)	High/Dist
1	Tank, AISI 304 Jacketed, insulated 50mm			
2	Tank cleaning device			Top
3	Agitator support C - 3150	drw. 41.165-402		
4	Product inlet 2x ø76 L=200	drw. 37.311		Top
5	Man way			
6	N2 inlet ~~DN40~~ ø38		90°	Top
7	Leg 3xø154	drw. 41.045		
8	Load Cell	drw. 32.302		Bottom
9	In/outlet,heating jacket, ø25	Inlet Outlet	25° 270°	bottom
10	Outlet Pipe ø76 (slope 5°)		0°	
11	Base for name plate	drw. 37.867	180°	
12	Welding socket for level switch	drw. 35.613A	30°	
13	Welding socket for Pt-100	drw. 35.619A	40°	
14	Weld. flange f. level trans. type UB 50 L			
15	Cable pipe			
16	Safety switch			
17	Micropilot M FMR 245, DIN 2527 DN50			
18	Sample valve (ball valve DN10)			
19	Disp.			
20	Disp.			
21	Disp.			

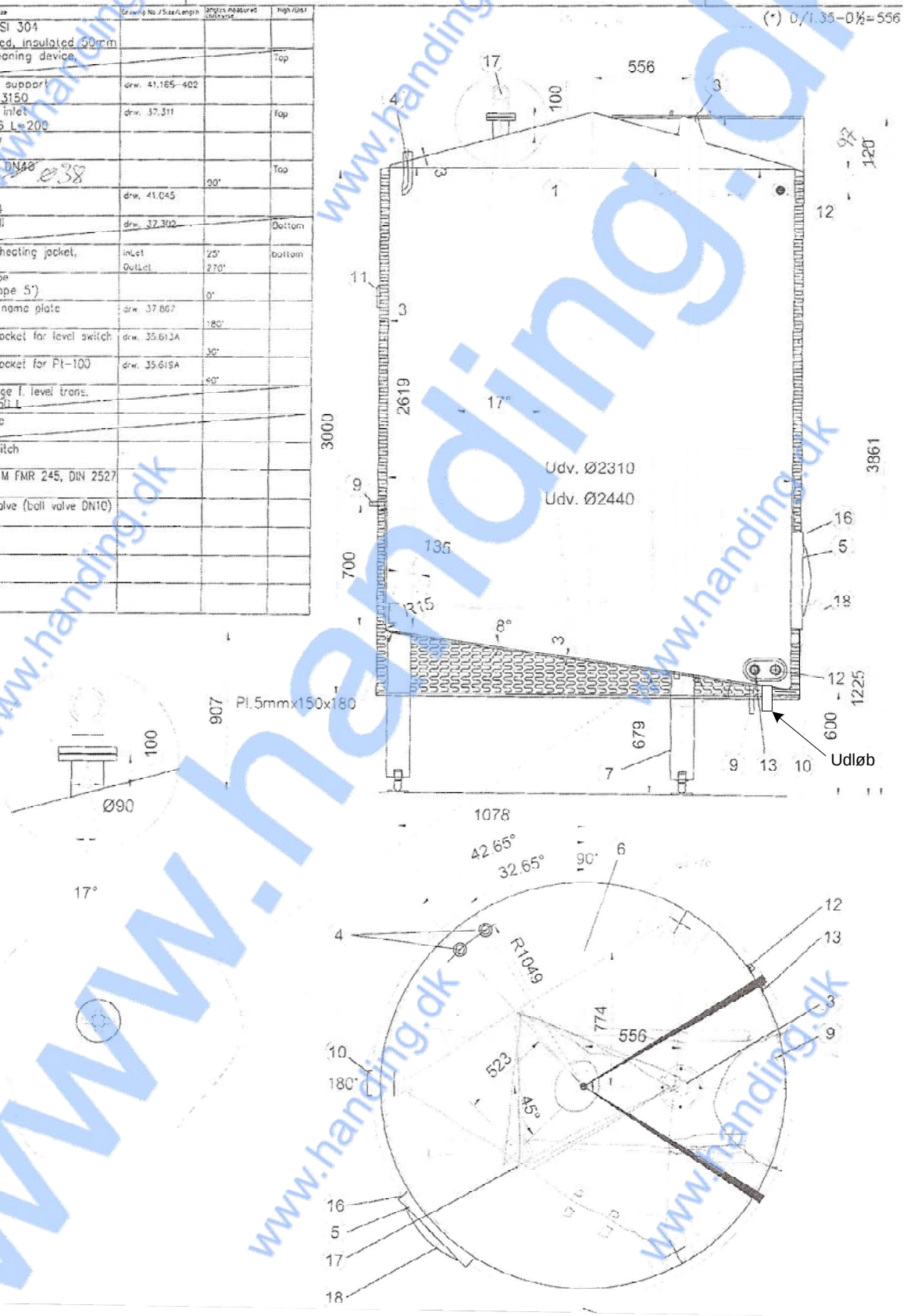

Handing ApS
Nordkranvej 5-9, Vassingerød
DK - 3540 Lynge
Tel.: +45 48160166
www.handing.dk

11.300 liter

Alle mål i mm.
Measures in mm

Dette dokument er vejledende
Der tages forbehold for fejl.
This document is only guiding.
We make reservation for possible errors

Lager nr. /tn
T2448